YINGJIAO®

YEC55 SERIES 55W



YEC series is designed for uninterruptible DC power supply (UPS), in addition to the main power supply circuit also provides one floating charge output, connected to the battery when there is mains power supply,the load uses AC power supply, while the charging circuit charges the battery float, and automatically switches to the battery power supply after power failure.
The YEC series is a classic metal mesh shell model, which provides one battery voltage supply output, but also provides one charging output.This series of power supply is widely used in emergency lighting, security monitoring and alarm system.

Features

- Universal AC input / Full range
- Cooling by free air convection
- Battery low protections
- 100% full load burn-in test
- Protection:Short circuit/Overload/ Over voltage
- Two Years Warranty

Model Information

Yingjiao Part Number	DC Voltage CH1/CH2	Rated Current CH1/CH2	Rated Power	CURRENT RANGE	VOLTAGE ADJ.RANGE
YEC55-13.8	13.8V/13.4V	3.25A/0.23A	51.38W	0~4A	12~14.5V
YEC55-27.6	27.6V/26.5V	1.8A/0.16A	53.92W	0~2A	24-29V

Input

VOLTAGE RANGE	90-264VAC/127-370VDC	
FREQUENCY RANGE	47-63Hz	
EFFICIENCY(Typ.)	71%	YEC55-13.8
	74%	YEC55-27.6
AC CURRENT(Typ.)	1.6A/115VAC	
	1A/230VAC	
INRUSH CURRENT(Typ.)	COLD START 20A/115VAC 40A/230VAC	
LEAKAGE CURRENT	<1mA/240VAC	

Output

RIPPLE & NOSE(max.)	100mVp-p	YEC55-13.8
	100mVp-p	YEC55-27.6
VOLTAGE TOLERANCE	±1.0%	
LINE REGULATION	±0.5%	
LOAD REGULATION	±0.5%	
SETUP,RISE TIME	800ms, 50ms/230VAC at full load	
	1600ms, 50ms/115VAC at full load	
HOLD UP TIME (Typ.)	80ms/230VAC at full load	
	16ms/115VAC at full load	

Protection

OVER LOAD	105%-150% Rated Output Power	
	AC Charging Mode: Hiccup mode, recovers automatically after	
	fault condition is removed,UPS Mode: Protected by internal fuse	
OVER VOLTAGE	CH1:15.87~18.63V	YEC55-138
	CH1:31.74~37.26V	YEC55-276
	Protection type: Hiccup mode, recovers automatically after	
	fault condition is removed	
BATTERY CUT OFF	9.5~11V	YEC55-13.8
	20~20V	YEC55-27.6

Function

DC ALARM SIGNAL(OPTIONAL)	AC fail CN1 PIN2
	Battery low under charge voltage 82.5%±2% CN1 PIN1
	Normal 0.8V max. Abnormal 5V±0.5V

Environment

WORKING TEMP.	-10 ℃ to +60 ℃ (Refer to "Derating Curve")
Working Humidity	20 ~ 90% RH Non-Condensing
STORAGE TEMP, HUMIDITY	-20℃ ~+85℃,10 ~ 95% RH
TEMP. COEFFICIENT	± 0.03%/℃(0~50℃) on CH1 output
VIBRATION	10~ 500Hz, 2G 10min./1cycle, 60min. each along X, Y,Z axes
MTBF	2380.9K hrs min. Telcordia SR-332 (Bellcore)

SAFETY & EMC

SAFETY STANDARDS	UL62368-1, TUV BS EN/EN62368-1,
	EAC TP TC 004, AS/NZS 60950.1 approved
WITHSTAND VOLTAGE	I/P-O/P:3KVAC I/P-FG:2KVAC O/P-FG:0.5KVAC
ISOLATION RESISTANCE	I/P-O/P, I/P-FG, O/P-FG:100M Ohms/ 500VDC/25 ℃/70% RH
EMC EMISSION	Compliance to BS EN/EN55032 (CISPR32) Class B, BS EN/EN61000-3-2
EMC IMMUNITY	Compliance to BS EN/EN61000-4-2,3,4,5,6,8,11,BS EN/EN55035

Note

1.All parameters NOT specially mentioned are measured at 230VAC input, rated load and 25℃ of ambient temperature.

2. Ripple & noise are measured at 20MHz of bandwidth by using a 12" twisted pair-wire terminated with a 0.1uf & 47uf parallel capacitor.

3.Tolerance : includes set up tolerance, line regulation and load regulation.

4.The power supply is considered a component which will be installed into a final equipment. All the EMC tests are been executed by mounting the unit onl a 360mm*360mm metal plate with 1mm of thickness. The final equipment must be re-confirmed that it still meets EMC directives. For guidance on how toperform these EMC tests, please refer to "EMI testing of component power supplies."

5.The ambient temperature derating of 3.5°C/1000m with fanless models and of 5°C/1000m with fan models for operating altitude higher than 2000m(6500ft).

Dimensions & Weight

Length:	159mm/6.26in
Width:	97mm/3.82in
Height:	38mm/1.50n
Weight:	500g

Packing

Carton Size:	36 × 31.5 x 17.5 CM
	14.17 x 12.40 x 6.89 in
Master Carton Quantities:	30pcs/Carton

Dimensions and Installation

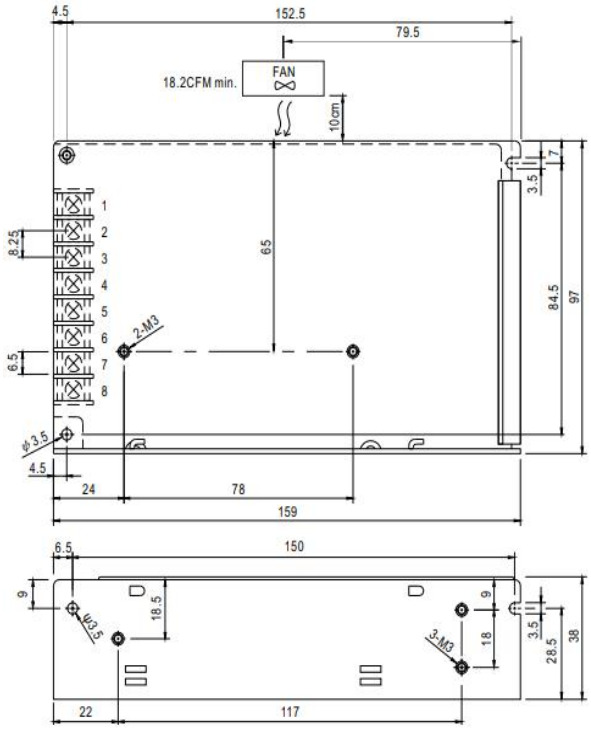

Terminal Pin No. Assignment :

Pin No.	Assignment	Pin No.	Assignment
1	AC/L	5	DC OUTPUT +V
2	AC/N	6	BAT. +
3	FG ⏚	7	BAT.-/COM
4	DC OUTPUT COM	8	NC

Block Diagram

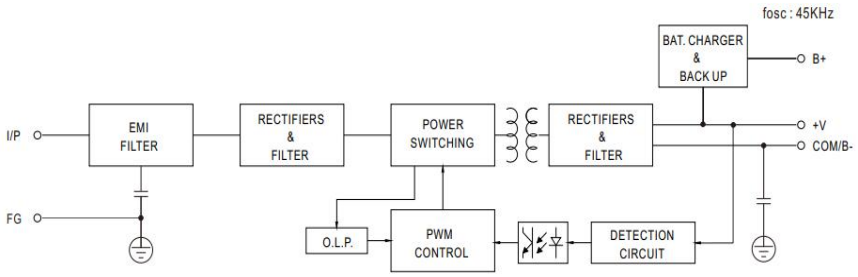

Deduction curve and temperature

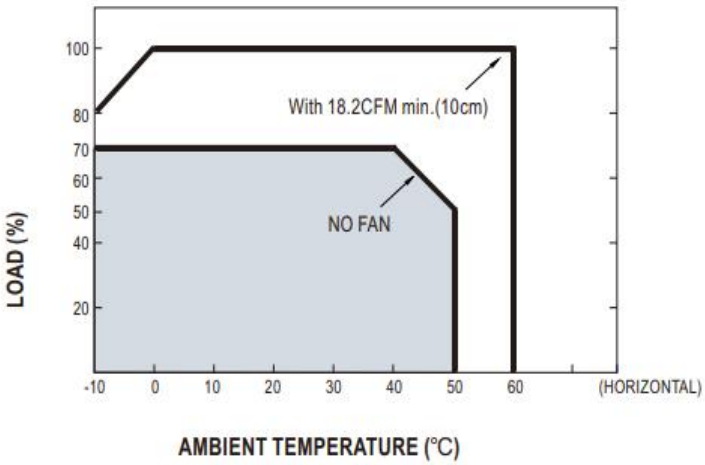

Minus output and input voltage curves

